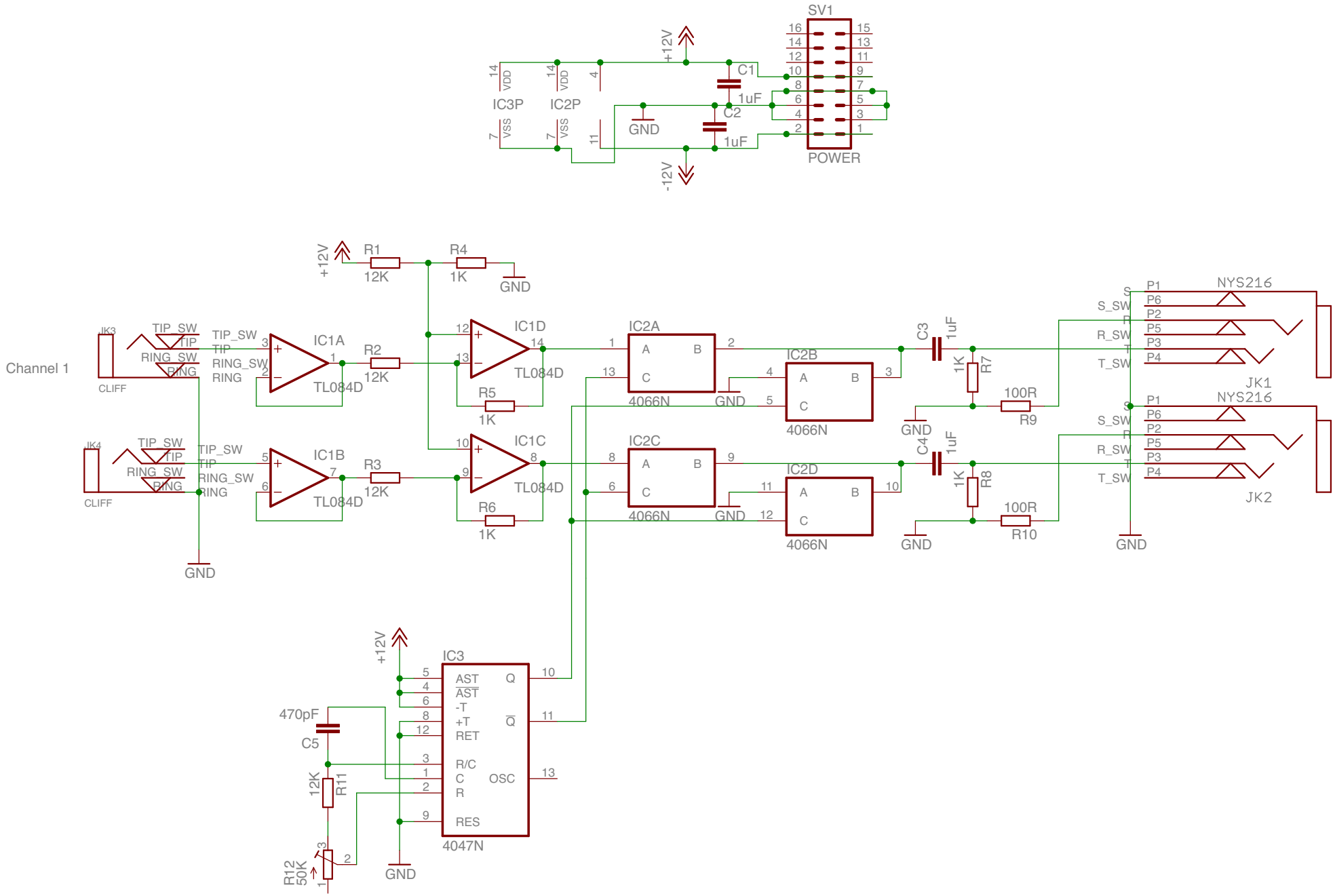
SV1
POWER
+12V
-12V
C1
1uF
C2
1uF
GND
IC3P
IC2P
VDD
VSS
Channel 1
JK3
JK4
CLIFF
TIP_SW
TIP
RING_SW
RING
IC1A
IC1B
IC1C
IC1D
TL084D
R1
12K
R2
12K
R3
12K
R4
1K
R5
1K
R6
1K
IC2A
IC2B
IC2C
IC2D
4066N
A
B
C
C3
C4
1uF
R7
R8
1K
R9
R10
100R
NYS216
JK1
JK2
S
P
T
S_SW
R_SW
T_SW
P1
P2
P3
P4
P5
P6
IC3
4047N
AST
AST
-T
+T
RET
R/C
C
R
RES
Q
Q
OSC
470pF
C5
12K
R11
R12
50K